TECHNICAL INFORMATION

EDITION 1.00

FOR

TRANSISTOR - FOUR - QUADRANT SERVO - AMPLIFIER

SERIES

MTR 105/7-14

MATTKE AG
Leinenweberstraße 12
D-79108 Freiburg
Germany

Telefon: +49 (0)761- 15 23 4-0
Telefax: +49 (0)761- 15 23 4-56
E-Mail: info@mattke.de
http://www.mattke.de

Dear customer,

We always try to guarantee for an optimum of security measures and to inform ourselves about the latest developments in technical research. However, it is necessary that we pass on the following further information to you as the user of our components:
The appliances are supply parts meant for processing by industry, trade or other factories specialised in electronics.

Safety precaution !!

Attention - do not touch!. The appliances have unprotected live parts. The voltage may be highly dangerous.

We also have to inform you that, for your own security, only an expert should work on the appliances.

In order to comply with the safety precautions, open connections must be protected against contact with cases, coverings or anything similar. Even after the appliance had been disconnected, there may still be a dangerous voltage (discharges of the capacitors).

Due to an error in handling or unfavourable conditions, the electrolytic capacitors may explode. If you have to work on the open appliance, do protect your body (hands!) and your face!

Make sure that there is enough ventilation because of the fire risk in case of overheating.

CONTENTS page

1. IMPORTANT INSTRUCTIONS

- the amplifier should only be connected and started by experienced technicians

- the amplifier should only be installed or removed with the supply voltage **switched off**

- after switching off the amplifier, parts of the board can still be alive for about 3 minute

- make sure that the intermediary circuit voltage measured at the plug-in unit between pin 8z and 28z cannot exceed 140 V even when the motor is **not** running

- please be careful when calculating the transformer secondary voltage and allow for voltage differences between no load and full load as well as mains fluctuations

2. GENERAL INFORMATION

The transistor servo amplifier MTR 105/7-14 is a pulse width modulated unit which can easily be mounted into a 19"/3U rack. Its main application is driving servo motors in the 4-quadrant mode (4 quadrant means that the amplifier can drive and brake the motor in either direction).

At the amplifier's output both polarities are available without switching over.

During acceleration the 2 fold current can be output for a maximum of 3 seconds, whereby the motor can reach 2 fold of its continuous torque rating as pulse torque.

For operation you only need the power supply, the motor and perhaps an external load resistor and a standard set value.

Advantages:

- on account of a special principle of modulation almost no phase noises from the amplifier or the motor
- high efficiency through optimal drive of the final stage
- a very small minimum load inductance and the low internal resistance of the amplifier result in a high dynamics
- I^2t current limitation
- protection for over voltage, over current and over temperature
- potential free switch output for brake relay at malfunction
- three modes of operation (tacho/IxR/current control) can be chosen by means of a jumper
- for all the possibilities of adjustment there are multiple trimming potentiometers

The amplifier is designed for a constant current of 7 A and a peak current of 14 A. In order to run motors of different power and different rated voltage it is possible to vary the intermediary circuit voltage in a wide range by changing the power supply.

3. TECHNICAL DATA

Rated voltage	105 V
Rated current	7 A
Pulsed current	14 A
Secondary transformer voltage	85 - 95 V AC / 8 A 15-0-15 V / 0.5 A
Voltage range of the set value inputs	0 to ± 10 V
Input impedance of set value inputs	44 kΩ ‖ 10 nF
Control range of input attenuators	17 - 100 %
Maximum tacho voltage	± 20 V
Control range of tacho attenuator	17 – 100 %
Maximum input drift	± 15 µV / °C
Bandwidth of cascade current controller	1 kHz
Clock frequency to earth 9 kHz	
Minimum load inductance	0.8 mH
Frequency of current ripple	18 kHz
Form factor of output current with minimum load inductance (0.8 mH)	1.01
Efficiency	95 %
Capacity of I^2t OC-output	50 V / 50 mA
Contact "ready"	disturbance = open
Auxiliary voltage for external additional circuits	± 12 V / 20 mA
Max. operating temperature	-20 ... 45 °C
Storage temperature	-30 ... 70 °C
Fitting position	vertical
Cooling	convection

4. CONTROL PRINCIPLE

In a traditional DC motor there are two static magnetic fields which react together. The commutation of the armature winding is carried out by means of brushes and commutator segments.

The principle of speed control with cascade current control is applied here. The overriding speed control circuit consists of speed controller and the motor-(tacho)-combination. The speed set value is preset externally by the user, e.g. by means of potentiometers or NC control system. The actual speed value is determined directly at the motor shaft, e.g. by means of a tacho generator, and is compared with the speed set value at the first accumulation point. The determined difference is the input value of the speed controller. From this control difference, the requested circuit set value which is passed on to the subordinate control circuit is calculated.

The current control circuit consists of the current controller, the pulse-width modulator and the final stage of the amplifier. The actual current value is measured in the motor circuit and returned to the accumulation point. Set value and actual value are compared and the difference is supplied to the amplifier which adjusts it to zero.

5. INPUTS

5.1 Speed set value inputs

The speed set value can be supplied alternatively or combined by addition via the set value inputs 1 and/or 2. The set value input 1 is a differential input and input 2 an earth referenced input.

The differential input has several advantages compared with the earth referenced input: common mode interference is suppressed and earth loops, which result in offset voltages, are interrupted. A disadvantage of the differential input is that the set value has to be supplied by two phases. Preferably set value voltages up to ± 10 V should be supplied. The input impedance of the set value inputs is 44 kOhm ‖ 10 nF. The inputs may be attenuated by means of P101 and P102 in the range of 17 ... 100%. Inputs that are not needed have to be connected to earth in order to exclude disturbances that could be caused by pick-ups.

5.2 Current limitation input

The current limitation input is usually needed for machines, e.g. in order to avoid the case of malfunctioning parts being moved by the drive with full torque and possibly damaging the machine, or e.g. in order to limit the winding tension at winding drives. Via this input the maximum available torque is always reduced! The range of the input voltage is 0 ... +12 V, where +10 V corresponds to a motor current of 14 A.
The input impedance is > 22 kOhm ‖ 10 nF.

5.3 Disable input

The disable input is active high, i.e. for an open input or positive input voltage > +10 V the motor is disabled. For an input voltage of 0 to +1 V the motor is enabled. Do not supply this input with a negative voltage or a positive voltage of over +20 V!! The input resistance is 10 kOhm.
The final stage is switched off and released immediately when this input is active.

5.4 Tacho input

The tacho input is a differential input and is designed for a tacho of 5 V/1000 rpm, this produces a range of tacho input voltage of -20 .... +20 V. For other configurations, we offer modified amplifiers.

6. SUPPLY

6.1 Auxiliary voltage inputs

The auxiliary voltages are needed in order to supply the complete control electronics with the necessary voltage.
In case of separate supply sources for auxiliary and intermediary circuit voltage, the auxiliary voltages must be switched on first and switched off last.
An alternating voltage of 15-0-15 V AC/0.3 A is needed. Higher values are not recommended as the dissipated energy increases unnecessarily which brings about an unnecessary increase of the heating of the amplifier.
With battery supply it is also possible to connect a DC-DC-converter; make sure that the remaining ripple is < 0.1 V.

6.2 Supply of the intermediary circuit

The supply of the intermediary circuit is done by means of a transformer, the secondary voltage of which should not exceed 95 V AC, as otherwise the ballast circuit is activated and could switch off the amplifier!

The secondary voltage must not exceed 140 V DC even at a short-time excess-voltage, as otherwise the electrolytic capacitors could explode. The secondary current of 8 A AC is sufficient if the maximum nominal current is not needed permanently. However, in case of higher demands we recommend a secondary current of 12 A.
Should an adjustment of the motor voltage be necessary, a lower transformer voltage is requested. The reference value is:

$$Utransfo = (Umot + 10) * 0.72$$

where Utransfo is the transformer secondary voltage, and Umot is the motor's nominal voltage.

The minimum voltage should not be lower than 15 V AC.

6.3 Battery supply

In the case of battery supply, use the DC-inputs provided for this; make sure that the polarity is correct!
The DC voltage may vary from 10 V...140 V.
In the case of battery supply and correct connection the generated brake energy is fed back to the battery.

7. OUTPUTS

7.1 I^2t output

The I^2t output is an open collector output which, after a current of over 7 A has been output for approximately 3 seconds, switches with a low impedance to earth. Parallel to this the yellow LED (I^2t) is illuminated.

The output can be loaded with a maximum of 50 mA and can have a maximum voltage of +50 V to earth.

7.2 Output "ready"

The output "ready" is a potential free contact which is closed during operation. In this case, the green LED is illuminated, in case of malfunction it shows read and the contact is open. The contact can be loaded with max. 50 mA at up to 50 V.

7.3 Actual current value output

At this output the actual current value can be measured with a voltmeter with an input resistance of > 10K ohms. The voltage that can be measured is proportional to the current flowing at that moment. The relationship is 3.375 V (pulse current) per 20 A, i.e. for an output current of 1 amp, the voltmeter reading will be 225 mV.

7.4 Motor output

At the motor outputs only motors of an inductance of > 0.8 mH should be connected directly. When motors of a lower inductance are used, a choke of => 0.4 mH has to be connected in each positive and negative motor line.

The amplifier is short-circuit proof and short to earth proof if such a fault occurs behind the chokes!

Short circuits and shorts to earth directly at the amplifier's outputs can lead to the breakdown of the appliance; we cannot guarantee for any of these cases.

8. ADJUSTMENT POSSIBILITIES

Potentiometer P101:	attenuation for set value input 1 control range 17.....100 %
Potentiometer P102:	attenuation for set value input 2 control range 17.....100 %
Potentiometer P103:	attenuation for tacho feedback control range 17.....100 %
Potentiometer P104:	amplification of the alternating voltage of the speed controller
Potentiometer P105:	offset adjustment of speed controller (motor standstill at set value = 0 V)
Potentiometer P106:	emf feedback (corresponds to P103 in the case of tacho control)
Potentiometer P107:	IxR compensation (for the compensation of the internal motor resistance)
Potentiometer P108:	continuous current limitation

LED 1 (green):	illuminated if amplifier is ready (also in the case of disable)
LED 1 (red):	illuminated in case of disturbance (over voltage, over current, over temperature). If this LED is illuminated, the amplifier must be switched off and on again.
LED 2 (yellow):	illuminated if the amplifier is in I^2t-limitation
JP101:	bridge between 1 and 2 for current controller bridge between 3 and 4 for tacho control bridge between 5 and 6 for emf-control

CN103 test points:	1	for U e.m.f.
	2	for motor current
	3	for tacho voltage
	4	for input 1
	5	for input 2
	6	earth

9. CONNECTIONS

15 POL-DIN-41612 structural shape H-Male (connector 1)

4	supply of intermediary circuit	alternating voltage
6	supply of intermediary circuit	alternating voltage
8	supply of intermediary circuit	DC voltage +UB
10	0 V AC / 0.5 A	
12/14	motor +	
16/18	motor -	
20	tacho +	
22	tacho -	
24	15 V AC / 0.5 A	
26	15 V AC / 0.5 A	
28	supply of intermediary circuit	DC voltage 0 V
30	external ballast resistance +	
32	external ballast resistance -	

15 POL-SUB-D-DIN-41652-FEMALE (connector 2)

1	+ 12 V max. 20 mA
2	GND
3	- 12 V max. 20 mA
4	+ 12 V max. 20 mA
5	current limitation input
6	GND
7	disable input
8	GND
9	set value input 2 earth referenced
10	I^2t indication (open collector output)
11	current set value output
12	potentialfree contact "ready"
13	potentialfree contact "ready"
14	set value input 1 non inverting
15	set value input 1 inverting

10. WIRING AND EARTHING

All control cables must be screened. The screen of the control cable must be connected to the control unit - and not to the amplifier! If the screen is earthed at both ends the advantages of the set value differential input are lost and, additionally, interference may arise.

The motor cable should be a 2 core cable. To reduce interference the cable should be screened. Connect the screen to the amplifier's earth.

The cores of any chokes should also be connected to the earth of the amplifier in order to avoid malfunction.

11. INITIAL OPERATION

11.1 Preparation

The amplifier is preadjusted by us.

In case of an eventual maladjustement, we recommend adjusting the amplifier as follows:

- set input attenuators P101 and P102 to the mid position
- set tacho pot P103 to the mid position
- set amplifiying pot P104 to the left position
- set offset pot P105 to the mid position
- for e.m.f. regulation set P106/107 to the mid position

If possible, the initial operation should be performed with the motor connected and the load detached!
If a tacho is used, special attention has to be taken to the correct polarity at the amplifier's input!
In the case of a wrong connection, the motor can work at full torque and the speed set value will not have any influence on the speed.

The disable input is opened.
When starting, preset the set value to 0 V. After switching of the disable input the motor should develop a holding torque and may drift a little. If small set values are input, the motor should follow.

If the amplifier is used as current controller, the motor must not show any noticeable torque at set value = 0 V.
At low set values, the motor also runs in one direction with high speed; however, the torque that the motor can develop depends on the set value.

If any disturbances occur during the initial operation, please read chapter 13.

11.2 Adjustment of pulsed current and continous current limit

The appliance delivers a pulsed current of 14 A. In order to limit this current, the current limitation input can be supplied with a voltage < 12 V. 10 V at this input corresponds to 14 A.

The continous current limit is adjusted via the pot P108. We recommend limiting the continous current limit so that it corresponds to the nominal current of the driven motor, in order to protect the motor in the case of a mechanically blocked shaft or excess load.

11.3 Speed adjustment

In order to adjust the maximum speed, a set value of maximum 10 V is supplied to a set value input. The desired final speed is adjusted via tacho potentiometer P103 or via P106 in case of emf-control.

If this adjustment doesn't result in a stable control behaviour, we recommend turning the tacho pot 103 (or e.m.f. pot 106) further to the right (higher speed) and then adjust the final speed with the input attenuator P101 or P102.

With e.m.f. control a speed deviation between the operation without load and with load can be minimized via P107.

11.4 Offset adjustment

Now, after all the previous adjustments have been effected, the offset adjustments can be made. For this purpose, a set value of 0 is supplied again and any drifting of the motor shaft is eliminated by adjusting P105.

11.5 Ballast circuit

The ballast circuit controls the intermediary circuit voltage and converts the brake energy which cannot be taken up by the electrolytic capacitor into heat.
The ballast circuit is on the final stage PCB. However, the internal ballast resistor is only designed for rare brake operations with low loads. As soon as the motor runs in start-stop operation or even reversing operation and must accelerate large loads, the internal ballast circuit must be disconnected and an external ballast circuit of a higher power must be connected to pins 30d and 32z.
The power of the resistor depends on the load that has to be braked, the braking time and the repeating time. It can be approximately calculated according to the following formula:

$$P = 0.005 * J * n^2 / T$$

P	=	power of the braking resistance
J	=	total moment of intertia
n	=	speed
T	=	period of braking action

The minimum resistance value that can be connected is 10 Ohms. The recommended resistance value is 10 Ohms.

11.6 Dimensions MTR 105/7-14

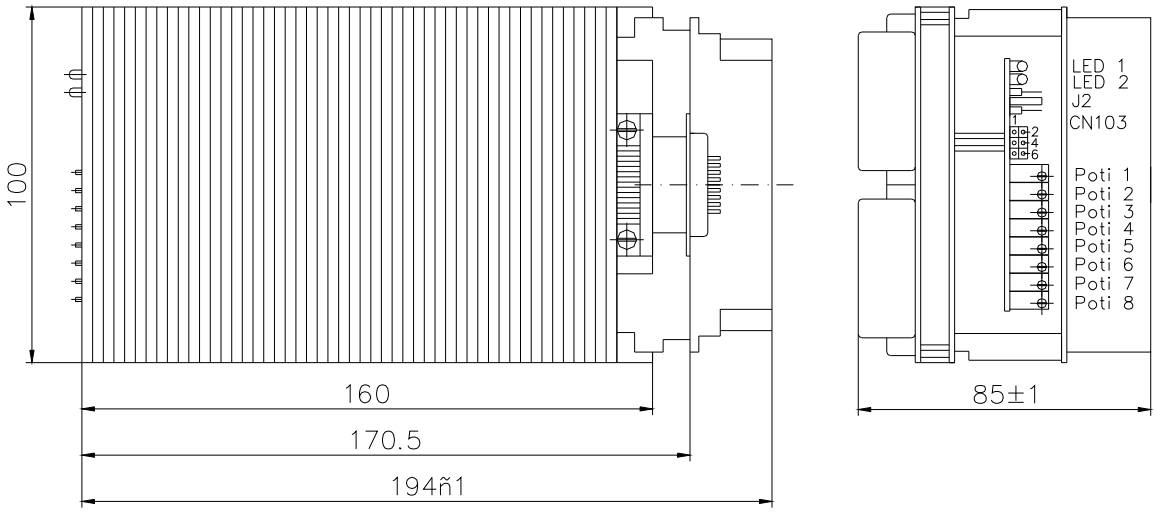

11.7 Wiring diagram MTR 105/7-14

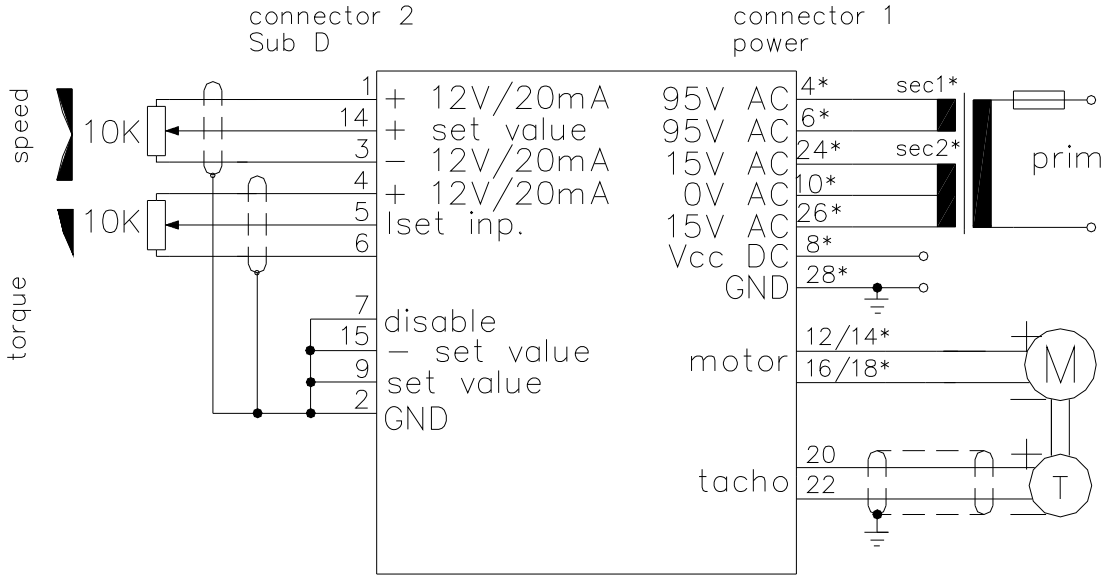

11.8 Wiring diagram MTR 105/7-14

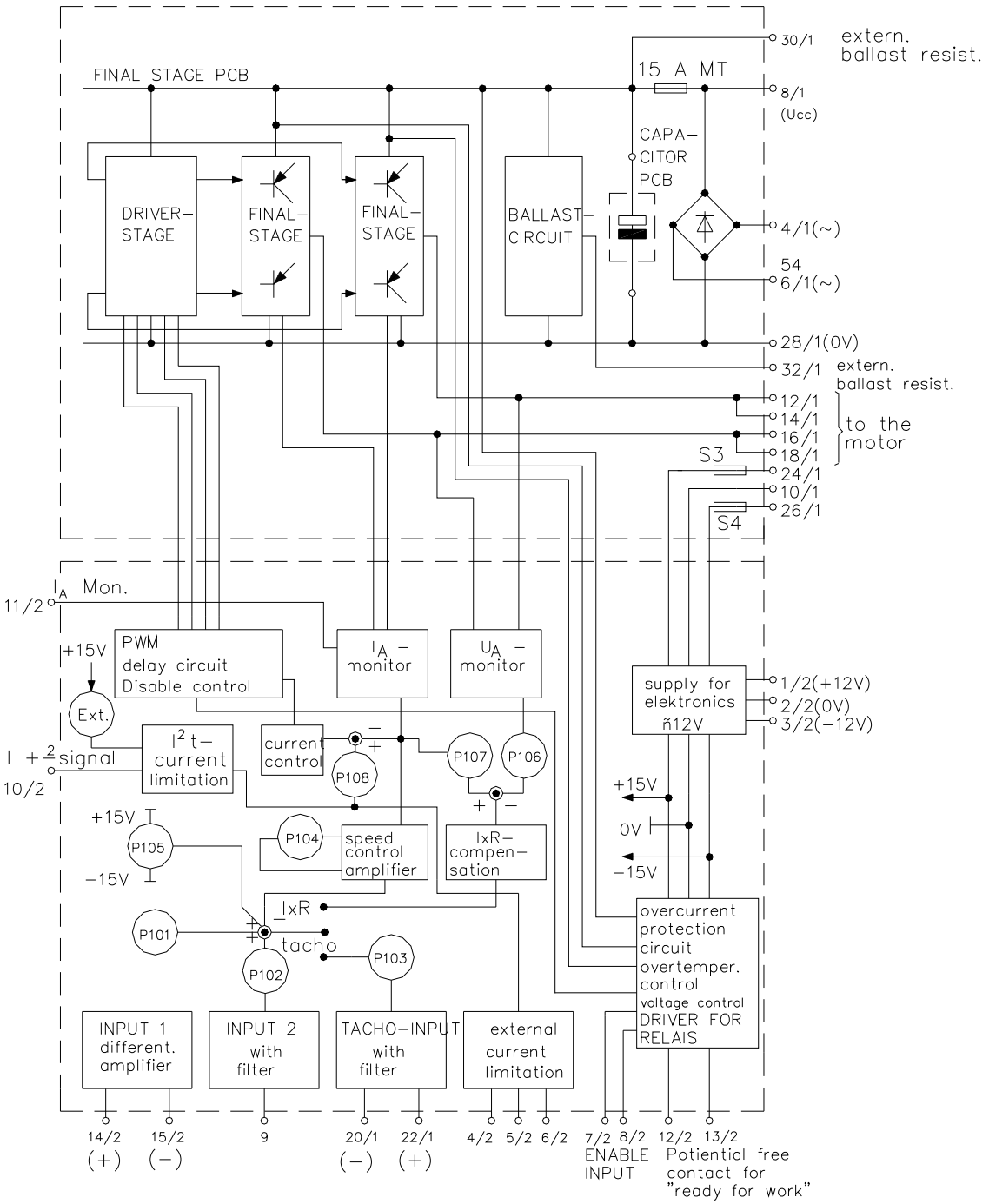

11.9 Plan of components MTR 105/7-14

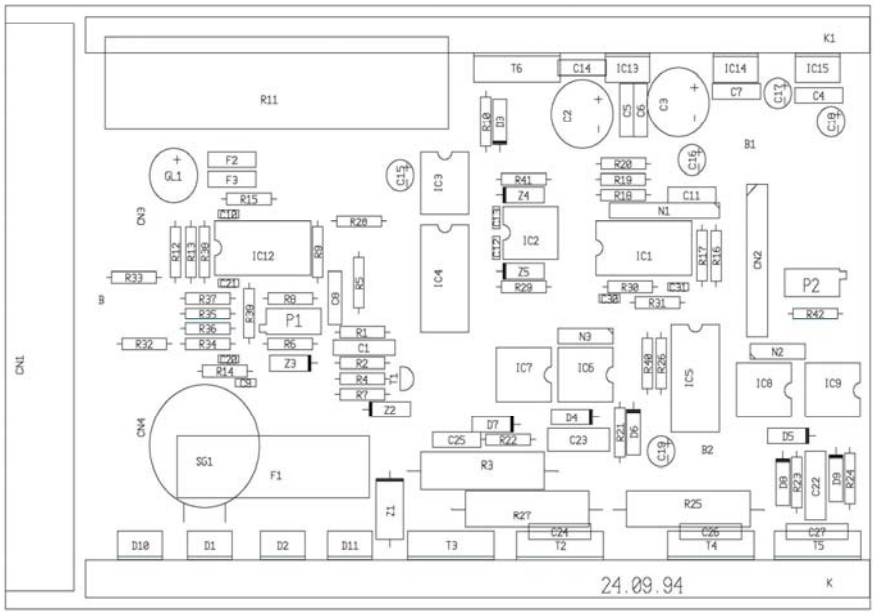

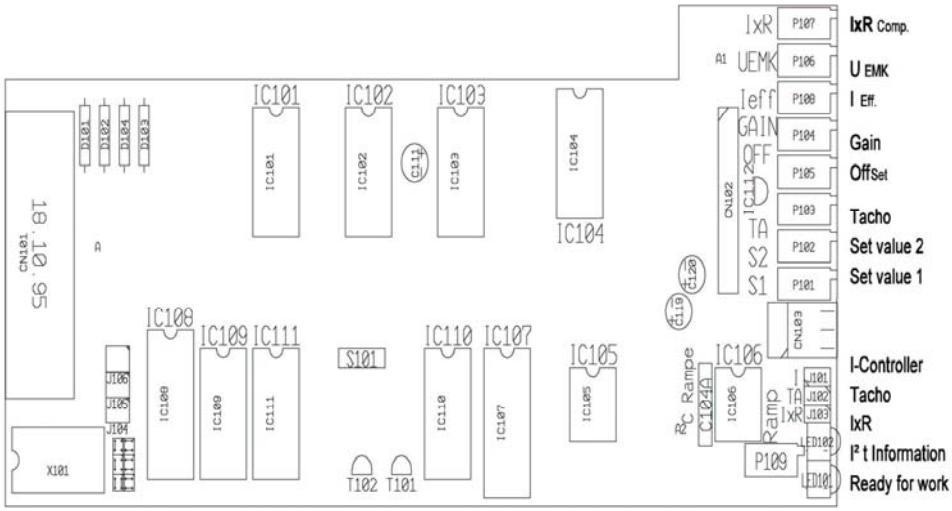

Position of the soldering bridges:
OPTIONS / STANDARD

IN Integral eff.			Ia Ia-Monitor	J 106
NS Neg. Stop			I^2t I^2t -Output	J 105
PS Pos. Stop			S2 set value 2	J 104

12. OPTIMIZATION OF THE CONTROL BEHAVIOUR

12.1 Alternating voltage gain

In most of the cases the optimization is limited to the adjustment of the alternating voltage gain at pot P104. The alternating voltage gain determines the torque and therefore the speed with which the amplifier readjusts (dynamic stiffness). For this purpose, couple the motor to the load and supply a set value of 0 V. This can be done by bridging the set value input with pin 6 (GND).
Turn pot P104 to the right until oscillation starts and then turn in immediately to the left in order fo find the point at which oscillation stops.

12.2 Direct voltage gain

Especially in case of an overriding position control circuit an exactly defined static stiffness is required. This corresponds to the torque with which a position is held.
In order to change the stiffness use resistor R125. With increasing resistance the stiffness decreases. The static stiffness mustn't be confused with the dynamic stiffness which is adjustable at P105.

12.3 Integral part of the speed controller

The capacitor C107 is responsable for the integral part of the speed controller.
The demands on the dynamics of amplifiers working as speed controllers differ considerably from the demands on amplifiers working with overriding position control circuits.
In the first case, stiffness has to be produced by the speed controller which therefore must have an integral gain as high as possible (C107 must be large). In most applications a short-time overshooting is allowed. In operation with an overriding position control circuit, the position control circuit produces the stiffness. It is of great importance that the amplifier has a band width as large as possible whereas the integral gain can be considerably lower than in the first case (C107 has to be decreased). The overshooting of the amplifier without position control gets a little smaller, however, the braking time till motor standstill is a little longer.

13. TROUBLE SHOOTING

Faults:	Possible causes:
No reaction, green LED is not illuminated	Check the DC power voltages. If one of the voltages are missing, check the wiring.
Green LED is illuminated, no other reaction	No contact at limit switch (enable/disable) input. Break in motor circuit. Check motor output with a voltmeter. Check the fuse on the final stage PCB.
There is a reaction, but no torque at the motor shaft	Is the current set value = 0? Is P108 on the left position?
Ballast resistor or heat sink heating up even without motor running	Supply voltage too high, reduce secondary transformer voltage.
Ballast resistor or heat sink temperature too high during operation	Brake energy too high. Mount additional capacitors or disconnect internal ballast resistor and mount an external ballast resistor of at least 10 ohms.
Noise interference in motor current	Common-mode interference at the differential input is to high. Install a separate earth cable from terminal 10d to the central 0 V-point of the control unit.
Motor runs uncontrolled at high speed.	Absence of tacho voltage or incorrect tacho connection polarity. Jumper JP101 on I-control.
Maximum motor speed is too low	Set value is too low, tacho voltage is too high, operation voltage is too low, load too high. Input potentiometer P103 on right position; check operation voltage and compare with motor e.m.f. at the desired speed; increase pulse or maximum continuous current for a short time in order to prove the overload: the speed should increase.
Too much drift	Unfavourable input circuitry; inputs are reduced; interference voltage at the input cables. Potentiometer of input on maximum. Screen the input cables. Check connections with regard to earth currents.
Over current alarm (with internal disable) at high speeds	Commutation limit of motor exceeded; choose smaller operation voltage and/or reduce peak current.
Audible howl at constant frequency and motor shaft instability	Torsional resonance due to weak attachment of tachogenerator. Improve the tacho/motor coupling or use a tacho with a lower moment of inertia.
Imprecise regulation with a large overshoot even with low gain	Inductive phase angling rotation due to a large motor inductivity and small mechanical time constant. Use a motor with a smaller inductivity; increase the working voltage.

Rumbling, rhythmic running noise with early activation of I^2t limit	
Tacho voltage ripple too large, use a better tacho or reduce the amplifier's gain (P104).Continuous available power too low, current limit activates too early	Load too large, possibly friction losses or constraints in the machine. Check the actual motor current. Avoid unnecessary high accelerations and decelerations.
Motor gets hot, even without load	Temperature rise due to hysteresis losses. Reduce operating voltage or attach reactors (chokes)in series with the motor.
Electrical interference too high	Wiring not correct. Mount reactors (chokes) directly adjacent to the amplifier and ground the cores to terminal 26 d. If controlling the amplifier from an external control system ground the control input cable screens AT THE CONTROLLER and not at the amplifier. Insert 330 ohm resistors in the control lines from the external controller.

14. OPENING OF THE APPLIANCE

Before the appliance can be opened, all power supply connections must be disconnected. Then wait for another 5 minutes.

In order to effect various jobs, the appliance must be opened. For this purpose, the heat sink must be unscrewed and the control card must possibly be detached. The control card is connected to the final stage board by a plug-in connector. When the heat sink is again fastened with screws, heat conduction paste must be used between the contact points of the side parts and the heat sink.

Tighten the screws properly but don't twist them off!

15. WIRING DIAGRAM POSITIONING AMPLIFIER MTNR 105/7-14