TECHNICAL INFORMATION
Edition 1.06

FOR

TRANSISTOR-FOUR-QUADRANT

SERVO-AMPLIFIER

TYPE

MTRM 25...61/5-15
MTRM 25...61/8-20

MATTKE AG
Leinenweberstraße 12
D-79108 Freiburg
Germany

Telefon: +49 (0)761- 15 23 4-0
Telefax: +49 (0)761- 15 23 4-56
E-Mail: info@mattke.de
http://www.mattke.de

Dear customer,

We always try to guarantee for an optimum of security measures and to inform ourselves about the latest developments in technical research. However, it is necessary that we pass on the following further information to you as the user of our components:
The appliances are supply parts meant for processing by industry, trade or other factories specialised in electronics.

Safety precaution!!

Attention - do not touch! The appliances have unprotected live parts. The voltage may be highly dangerous.

We also have to inform you that, **for your own security**, only an expert should work on the appliances.

In order to comply with the safety precautions, open connections must be protected against contact with cases, coverings or anything similar. Even after the appliance had been disconnected, there may still be a dangerous voltage (discharges of the capacitors).

Due to an error in handling or unfavourable conditions, the electrolytic capacitors may explode. If you have to work on the open appliance, do protect your body (hands!) and your face!

Make sure that there is enough ventilation because of the fire risk in case of overheating.

Contents

1. IMPORTANT INSTRUCTIONS

- The amplifier should only be connected and started by experienced technicians.

- The amplifier should only be only be installed or removed with power supply **switched off.**

- After switching off the amplifier, parts of the board can still be alive for approx. 3 minutes.

- Make sure that the intermediary circuit voltage measured at the plug-in unit between pin 22 ace and 32 ace cannot exceed 85 V DC even if the motor is at standstill.

- Please be careful when calculating the transformers secondary voltage considering the voltage drop between no load and full load and mains fluctuations.

2. GENERAL INFORMATIONS

Transistor amplifiers of the series **MTRM** are pulse width modulated units conceived to be mounted into 19"/3U racks. They operate in the 4-quadrant mode, i.e. they can drive and brake a motor in either direction.
During the acceleration a higher current is available allowing the motor to reach the pulsed torque. For operation you need the power supply, the motor with or without DC- tachogenerator or encoder, in certain cases an external ballast circuit and set-value.

Advantages:

- by using a special construction principle almost no phase noises from the amplifier or the motor are emitted.
- high efficiency is obtained by an optimal set-up of the final stage.
- high dynamics are the result of very small minimum load inductance and the low internal resistance.
- I^2t current limitation
- Over voltage, over current and over temperature protection.
- Relay contact to signalize brake at malfunction
- 4 modes of operation (tacho/encoder/IxR and current control) selected by soldering bridges.
- All adjustments are made by trimming potentiometers.
- measuring points at the front end of the device (2 mm jack plugs).
- No auxiliary voltages needed.

The standard amplifiers are designed for a continuous current of 5/8 A and a pulse current of 15/20 A. Modified amplifiers can supply a continuous current of 10 A. In order to operate motors with a different power and nominal voltage the intermediate voltage can be varied in a broad range by using an adequate power supply.

3. TECHNICAL DATA

	25...61/5-15	**25...61/8-20**
Nominal voltage	25...61 V	25...61 V
Nominal current	5 A	8 A special version with 10 A available
Pulsed current	10 A	20 A
Transformer voltage:		
Secondary	20..52 V AC/7 A	20..52 V AC/12 A
Fuse F1	10 A sl	16 A sl
Range of the set value inputs	0... ± 10 V	
Impedance of the set value inputs	20 kOhm // 33 nF	
Control range of the tacho attenuators	17... 100 Ohm	
Maximum tachogenerator voltage	± 20 V	
Maximum input drift	± 15 µV/°C	
Bandwidth of the cascade current controller	1 kHz	
Clock frequency to earth	9 kHz	
Minimum load inductance	0.8 mH	
Frequency of current ripple	18 kHz	
Output current form factor with minimum load inductance (0.8 mH)	1.01	
Efficiency	95 %	
Relay contact ready to operate	50 V/50 mA	
Signalizing contact ready	malfunction = open	
Release input active at	> 5 V/> 5 mA	
inactive at	< 1 V/0 mA	
Output voltage for the operation of an encoder	+ 5 V/150 mA	
I^2t signal	open collector (+ 12 V)	
Power supply for auxiliary circuits	± 12 V/ 20 mA	
Maximum admissible ambient temperature	0° ... + 45° C	
Maximum storage temperature	-30° ... +70° C	
Fitting position	vertical	
Cooling system	by convection	
Structural shape of the connector	32 POL-DIN-41612-D-.MALE	

Suitable auxiliary equipment

Ballast circuit MABA
Support for pcb's type D
Front panel (3U, 12D)
Toroidal transformer
Chokes type:
D 0.4 - 25 - 10 (2 p.)
D 0.9 - 18 - 6 (2 p.)

4. CONTROL PRINCIPLE

In a conventional DC motor two magnetic fields are in interaction. The commutation is carried out mechanically by means of carbon brushes acting on commutator segments of the armature winding.

The principle of a speed control with an underlying current cascade is applied here.

The speed control circuit is composed by an amplifier and a motor- (tacho/encoder-) combination. The speed set value is predetermined by the user or a numeric control unit. The actual speed value is measured directly at the motor shaft, e.g. by means of a tachogenerator, and is compared with the speed set value at the first accumulation point. The determined difference is the input value of the speed controller and used to form the necessary current set value of the underlying current controller. The current control circuit consists of the current controller, the pulse-width modulator and the final stage. The actual current value is measured at the motor connection and returned to the accumulation point. Set value and actual value are compared and the difference is adjusted to zero.

The advantage of this kind of regulation is that the current limitation necessary to protect the motor and the amplifier can be easily realized by limitating the output voltage of the speed regulator (current set value).

Circuit diagram MTRF 25...61/5-15, motor with tachogenerator

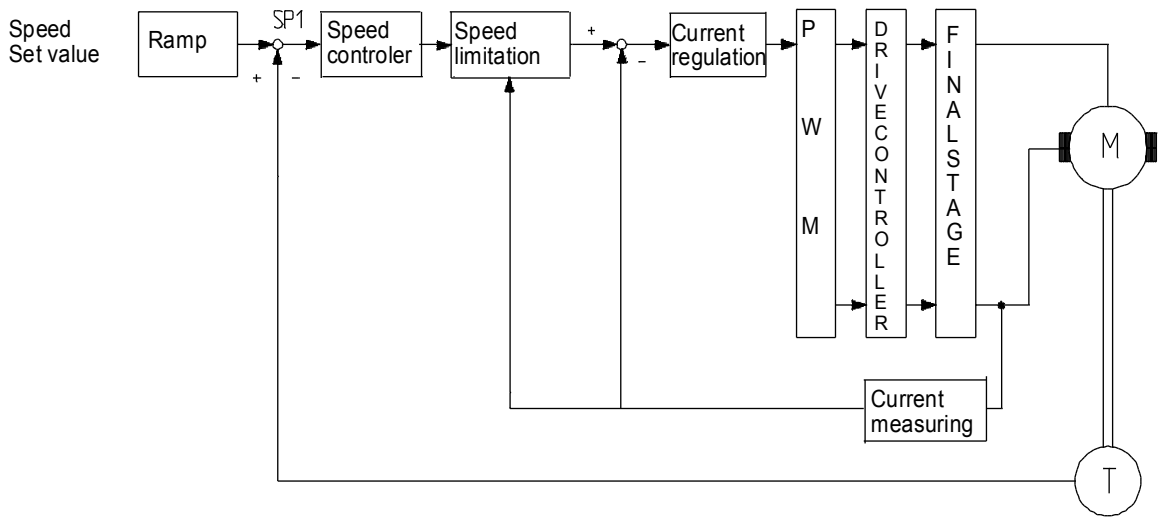

5. CONNECTIONS

2 a	+ 12 Volt (output)
2 c	- 12 Volt (output)
4 ac	tacho + / encoder track B
6 a	I^2t signal
6 c	tacho - / encoder track A
8 ac	ready to operate
10 a	not connected (optional: external current limitation)
10 c	signal ready to operate
12 ac	set value input +
14 a	not connected
14 c	set value input -
16 ac	enable
18 a	auxiliary voltage 5 V for encoder
18 c	motor current monitor
20 ac	GND (electronics)
22 ac	motor +
24 ac	motor -
26 ac	intermediate circuit power supply DC V+
28 ac	GND (power)
30 ac	intermediate voltage power supply AC
32 ac	intermediate voltage power supply AC

6. WIRING AND EARTHING

All control cables have to be screened. The screen of the control cable must be connected to the control unit and not to the amplifier. If the screen is earthed at both ends the advantages of the set value differential input are lost and, additionally, interferences may arise.

The motor line should consist of a three-core separate, shielded cable with a minimum section of 1.5 mm^2: The shield should be connected to the power mass of the amplifier.

The cores of any chokes should also be connected to the earth of the amplifier in order to avoid malfunction.

7. EXPLANATION OF CONNECTIONS

INPUTS

7.1 Speed set value inputs (pin 12 ac and 14 c)

The speed set value has to be connected to the differential amplifier.
The differential input has several advantages compared with an earth referenced input: common mode interference is suppressed and earth loops causing offset voltages are interrupted. A disadvantage of the differential input consists in the fact that two wires have to be used. Preferably set value voltages of up to ± 10 V should be used. The input impedance of the set value input is 44 kOhm / 10 nF. Unused inputs should be earthed in order to avoid interferences.

7.2 Option: Current limitation (optional pin 10 a)

The current limitation input is usually needed to adjust a machine, e.g. to avoid the unintended operation with full torque causing damages in case of a malfunction or to adjust the winding force at a winding drive. The use of this input always reduces the maximum available torque. The input voltage range is 0 ... ± 10 V whereby 10 V represent a motor current of 20 A. The input impedance is 44 kOhm, without this option the effective current can be adjusted with the potentiometer P4.

7.3 Input enable (pin 16 ac)

The input enable is “high active”, i.e. if it is open or grounded the motor is without current. In case a voltage of 5 to 24 V DC is connected to the input the motor current is switched on. No negative or higher voltage than 25 V must be connected. In case enable and switch on of the amplifier are made simultaneously the final stage will be active after a delay of 200 m/sec. The switch off is immediate.

7.4 The tacho-/encoder input (pin 4 ac, 6 c)

Depending on the selected mode the input is prepared for the adequate signal.

Mode tacho (bridges B2 and B8 closed)
The tacho input is conceived as differential input with a standard voltage of 5 V/1000 r.p.m. devices, corresponding to a total range of -20 V to + 20 V. For other voltages modified amplifiers can be supplied.

Mode encoder (bridges B1 an B9 closed)
Expected are signals with track A and B of a unit with 500 I./rotation and 5 V. In case other resolutions are used the amplifier has to be modified. The track A must precede the track B by 90°.
The amplifier provides the power supply of 5 V DC (pin 18 a).

POWER SUPPLY

7.5 AC power supply (pin 30 ac, 32 ac)

The intermediate power supply is done by means of a transformer with a maximum secondary voltage of 60 V AC, in case of higher voltages the ballast circuit is activated and will switch off the amplifier.
The secondary voltage must not exceed 70 V AC even at a short time excess-voltage, as otherwise the electrolytic capacitors could explode.
Secondary current for MTRM 25...61/5-15 = 7 A
Secondary current for MTRM 25...61/8-20 =10 A
If the motor voltage ha to be modified (U_{MOT} + 10)* 0.72, a lower transformer voltage is necessary (U_{TRANSF} in V AC). Please use the following formula:

$$\mathbf{U_{TRANSF} = (U_{MOT} + 10) * 0.72}$$

The minimum voltage should not be under 20 V AC.

7.6 DC power supply (pin 26 ac, 28 ac)

In case of battery power supply, please use the provided DC inputs, special care has to be taken for the correct polarity.
The DC voltage may vary in a range from 25...65 V. In case of a battery power supply and correct connection the generated brake energy is fed back to the battery.

OUTPUTS

7.7 Output “ready” (pin 8 ac, 10 c)

The output “ready” is a potential free relay contact which is closed during operation. In this case the green LED is illuminated.
The maximum load is 50 mA and +50 V.

7.7.1 Auxiliary voltage supply (pin 18 a)

In case an encoder is used the power supply is made through pin 18 a. The maximum available current is 150 mA.

7.8 Ia monitor (pin 18 c)

At this point the actual value of the motor current can be measured by means of an instrument with an input impedance of > 10 kOhm.

7.9 I^2t signal (pin 6 a)

At the end of the pulsed current phase the I^2t current limitation circuit is active and limits the amplifier to its nominal current. A voltage of 12 V is available at the open collector output and the yellow LED is on.

7.10 Reference voltage (pin 2 a, 2 c)

This output puts at the disposal of the user a DC voltage of ±12 V with a maximum possible charge of 20 mA which may be used for the set up value or to activate the final stage.

7.11 Motor output (pin 22 ac, 24 ac)

At the motor output only motors of an inductance of > 0.8 mH should be connected directly. When motors of a lower inductance are used, a choke of => 0.4 mH has to be connected in each (positive and negative) motor line.
The amplifier is short-circuit proof and short to earth proof if such an event happens after chokes of 0.4 mH.

Short circuits and shorts to earth directly at the amplifier's output can lead to the breakdown of the amplifier; we cannot guarantee for any of these cases.

8. ADJUSTMENT POSSIBILITIES AND MEASURING POINTS

8.1 Adjustment possibilities

Potentiometer P1 :	attenuator for the EMF/encoder/tachogenerator feedback control range 17...100 %
Potentiometer P2:	offset adjustment of the speed controller (standstill of the motor = 0 V)
Potentiometer P3:	amplification of the alternating voltage
Potentiometer P4:	limitation of the effective current

Reset switch

LED 1 (green) :	signalizes “ready for operation” of the amplifier (even in case of disable)
LED 2 (red) :	illuminated in case of disturbance (overvoltage, overcurrent over temperature)
LED 3 (green) :	signalizes enable, i.e. final stage operation
LED 4 (yellow) :	illuminated in case I^2t is active

8.2 Mode selection

B1, B9	: Bridges encoder
B2, B8	: Bridges tachogenerator
B3	: Bridge EMF control
B4	: Bridge current controller

8.3 Measuring points (2 mm jacks)

Set value speed control	: 0...± 10 V according to the selected set value
Actual value speed control	: 0...± 10 V according to motor speed
Current actual value	: 0...± 10 V according to the pulsed or effective current
“0 V” potential	: only to be used in case the measuring instrument has no earth loop, e.g. an earthed oscilloscope

9. DIMENSIONED DRAWING

MTRM 25...61/5-15 **MTRM 25...61/8-20**

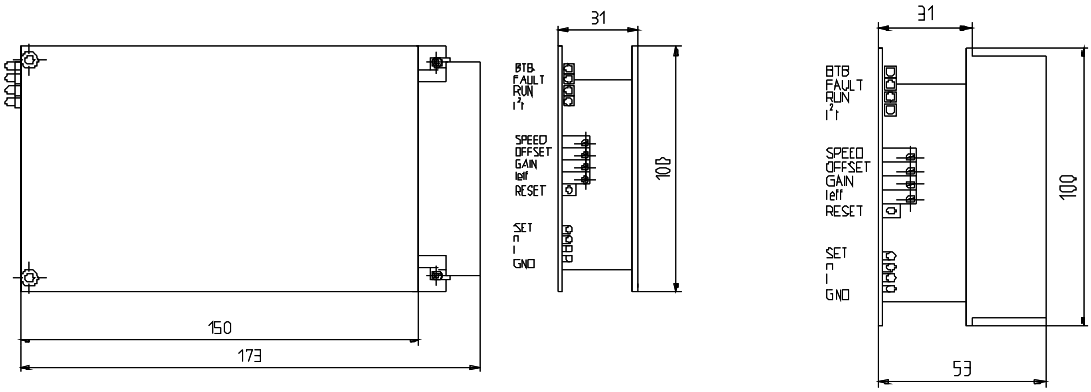

10. INITIAL OPERATION

Input test circuit MTRM with tacho mode

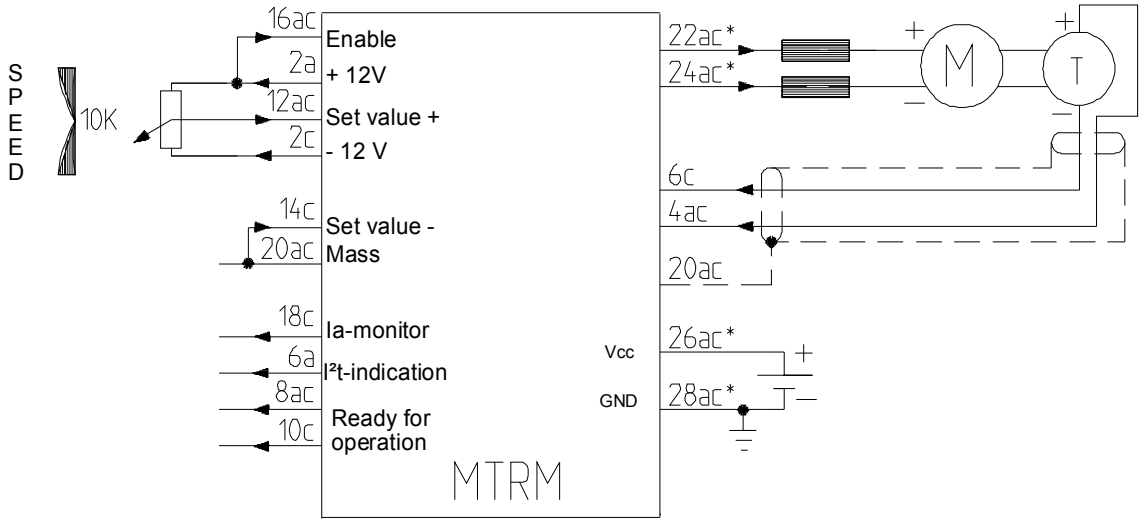

* Please observe minimal cross section of cable according to VDE.

Input test circuit MTRM with encoder mode

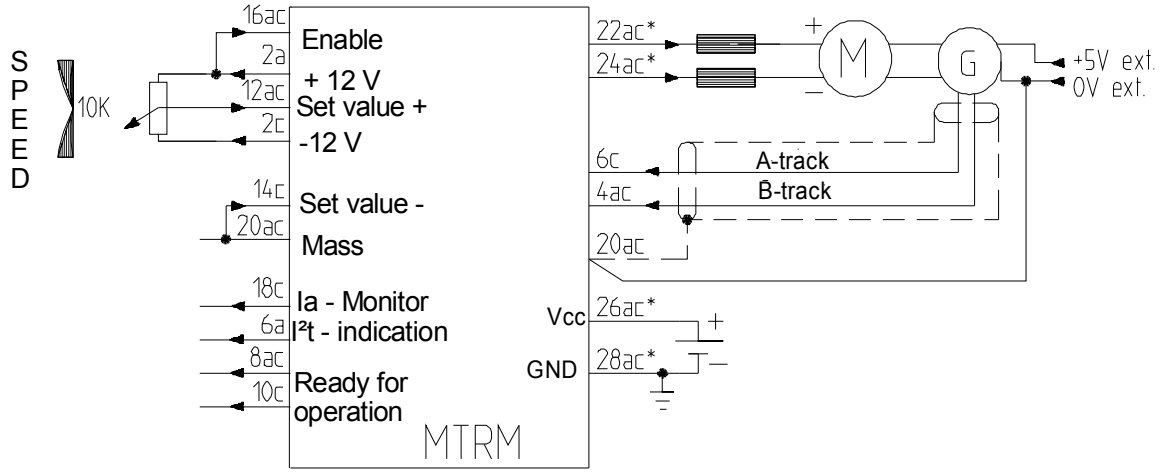

* Please observe minimal cross section of cable according to VDE.

Input test circuit MTRM with tacho mode and external control

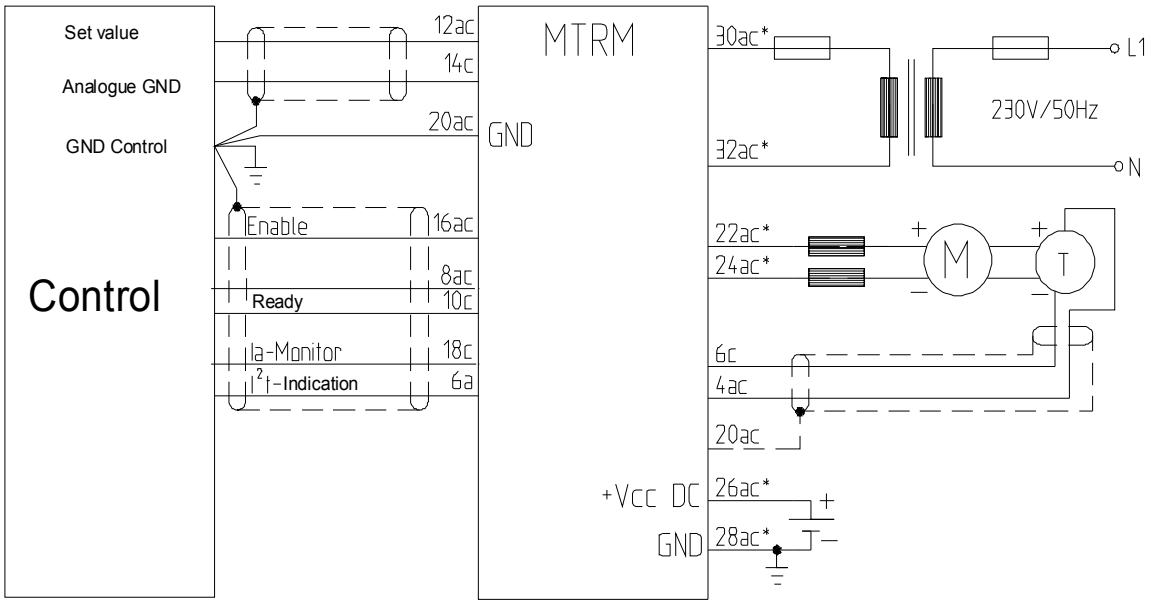

* Please observe minimum cross section according to VDE 700.

Input test circuit MTRM with encoder mode and external control

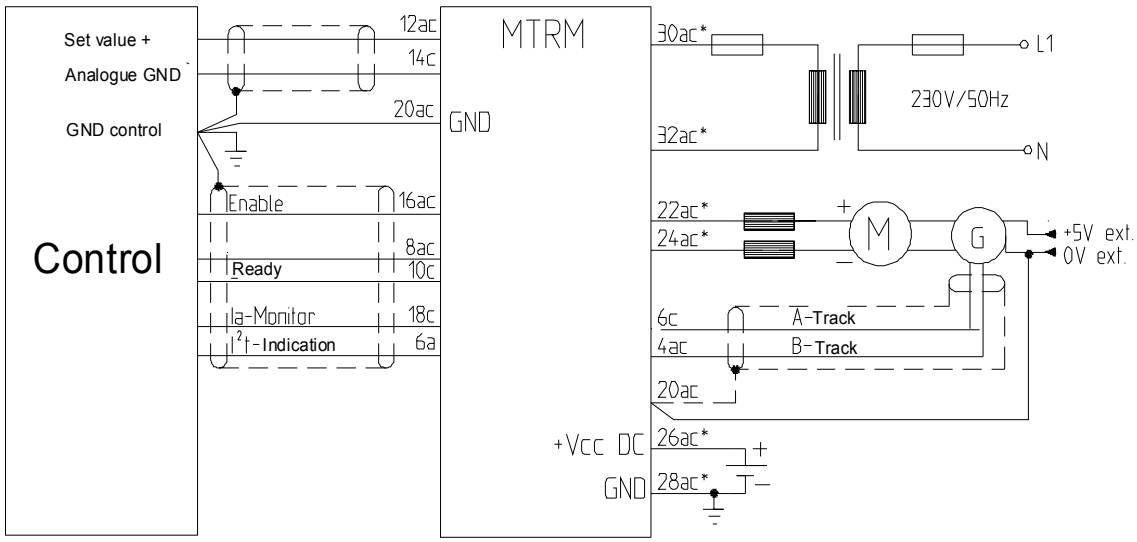

* Please observe minimum cross section of cable according to VDE 700.

10.1 Pre-adjustment

At delivery, the amplifier is pre-adjusted by the manufacturer.
In case of a possible maladjustment, we recommend to pre-adjust the amplifier as follows:

- P1 potentiometer attenuator speed control to the left position
- P2 potentiometer offset adjustment to the mid position
- P3 potentiometer amplification to the left position

The mode can be selected with soldering bridges (marked on the soldering side)

10.2. Mode encoder

If an encoder with a resolution of 500 lines/TTL is used the bridges B1 and B9 have to be closed. With the potentiometer P1 the desired final speed at 10 V set value can be adjusted.

Attention:
In case of a wrong connection of the motor or the encoder track lines the motor will turn uncontrolled at maximum speed.
If with the same set value the turning direction of the motor should be reversed, both the motor lines **and** the encoder tracks have to be modified.

10.3 Mode tachogenerator

If a motor with tachogenerator is used the bridges B2 an B8 have to be closed.

Important: correct polarity of motor and tacho

To be sure of the correct connection of the motor and its tachogenerator only an easy voltage measurement on the switched-off unit is necessary.
Needed is a voltmeter with indication of the polarity.
The motor shaft must be turned by hand into one direction. A voltage is originated in the motor cable (pin 22 ac) and the tacho cable (pin 4 ac) against mass (pin 20 ac). The polarity of the voltages must be opposed. If this is not the case either the motor cables (pin 22 ac with 24 ac) or the tacho cables (pin 4 ac with 6 c) have to be changed.
In case of a wrong connection of the motor it will turn uncontrolled at maximum speed and the set value has no influence.
If the amplifier is operating and the motor turns in the wrong direction, both the motor **and** the tachogenerator lines have to be modified.
With the potentiometer P1 the desired final speed at 10 V set value can be adjusted.

10.4 EMF control (B3)

If no tachogenerator or encoder are available the amplifier can be operated in mode EMF.
In this case the soldering bridge B3 must be closed.
The speed adjustment has to be done as described under 10.3 (tacho control).

10.5 Current control

This mode can only be ordered directly at the factory, the same is valid for a modification to this mode.
The soldering bridge B4 must be closed.
In case of a cascade positioning control, often only a current control of the amplifier is required. In this case the speed controller is bridged (gain = 1). The voltage supplied to the set value corresponds to the motor current and thus to the torque.
In this mode the motor speed cannot be regulated and the motor turns without charge at full speed with low set values. At the set value of 0 V the motor must not develop torque.

10.6 Adjustment of the effective current

We recommend you to limit the effective current in such a way that it corresponds to the nominal current of the driven motor in order to protect the motor in case of a mechanically blocked shaft or in case of an overload. An adjustment of the potentiometer P4 to the right reduces the the respective current.
The duration of the pulse current phase depends on the adjusted ratio: Iimp/Ieff. If the controller is adjusted according to its nominal data, the pulse current phase lasts approximately 5 seconds. If the ration is increased, e.g. 3:1, the time decreases, for a smaller ratio, the time is longer.

Annotation:
In order to measure the adjusted currents, the motor can be replaced by an amperemeter with a suitable measuring range. However the necessary minimum load inductance (0.8 mH) must be secured, i.e.it must be realized by chokes.

10.7 Offset adjustment

With a set value of 0 Volt* the motor should stand still. If this is not the case any drift of the motor can be adjusted with potentiometer P2.
*The set value of 0 V can easily be realized by grounding the set value input (bridging 12 ac to 14 c).

10.8 Ballast circuit (not included in the amplifier, available as accessory)

Depending on the application, it may be necessary to use a ballast circuit type MABA. This circuit controls the intermediate circuit voltage and converts in heat the motor's braking energy, which is not absorbed by the electrolytic capacitor.
It is connected to the 32 channel plug, between pin 26 ac ($+V_{CC}$) and pin 28 ac (power mass).

10.9 Connection to an external set value

The set value wiring has to be shielded. The screen must only be grounded at the encoder side. In addition a mass connection of 1 mm^2 has to be made between set value encoder and the amplifier.

11. OPTIMIZATION OF THE CONTROL REACTION

11.1 Alternating voltage amplification

In most cases the optimization is limited to the adjustment of the alternating voltage gain at potentiometer P3. It determines the torque and thus the readjustment speed of the amplifier.

For this purpose the motor has to be under load and the set value at 0 V (bridge between pin 12 ac and 14 c).
Turn the potentiometer P3 to the right until the motor shaft begins to oscillate, then turn immediately to the left until oscillation stops.

11.2 Direct voltage amplification

Especially in case of cascade control circuit an exactly specified static stiffness is often required. The stiffness corresponds to the torque, with which the position is hold.

The modification of the stiffness can be done by changing the resistor R15, it diminishes with a rising resistance. The static stiffness should not be confused with the dynamic stiffness adjustable with potentiometer P3.

11.3 Integral part of the speed controller

The integral part of the amplifier is determined by the capacitor C3.

The demands on the dynamics of amplifiers operating as speed controllers differ considerably from the ones on amplifiers operating with overriding position control circuits.
In the first case, stiffness has to be provided by the speed controller which therefore must have an integral gain as high as possible (the

capacity of C38 must be low) whereby in most applications a short overshooting is tolerated.
In operation with an overriding position control circuit, the position control produces the stiffeners. It is of high importance that the band width of the amplifier is as large as possible whereas the integral gain can be considerably lower than in the first case (high capacity of C38).The overshooting for the amplifier without position control gets a little smaller, however, the braking time until standstill of the motor will be slightly longer.

12. PLAN OF COMPONENTS: MTRM

Component side of the pcb

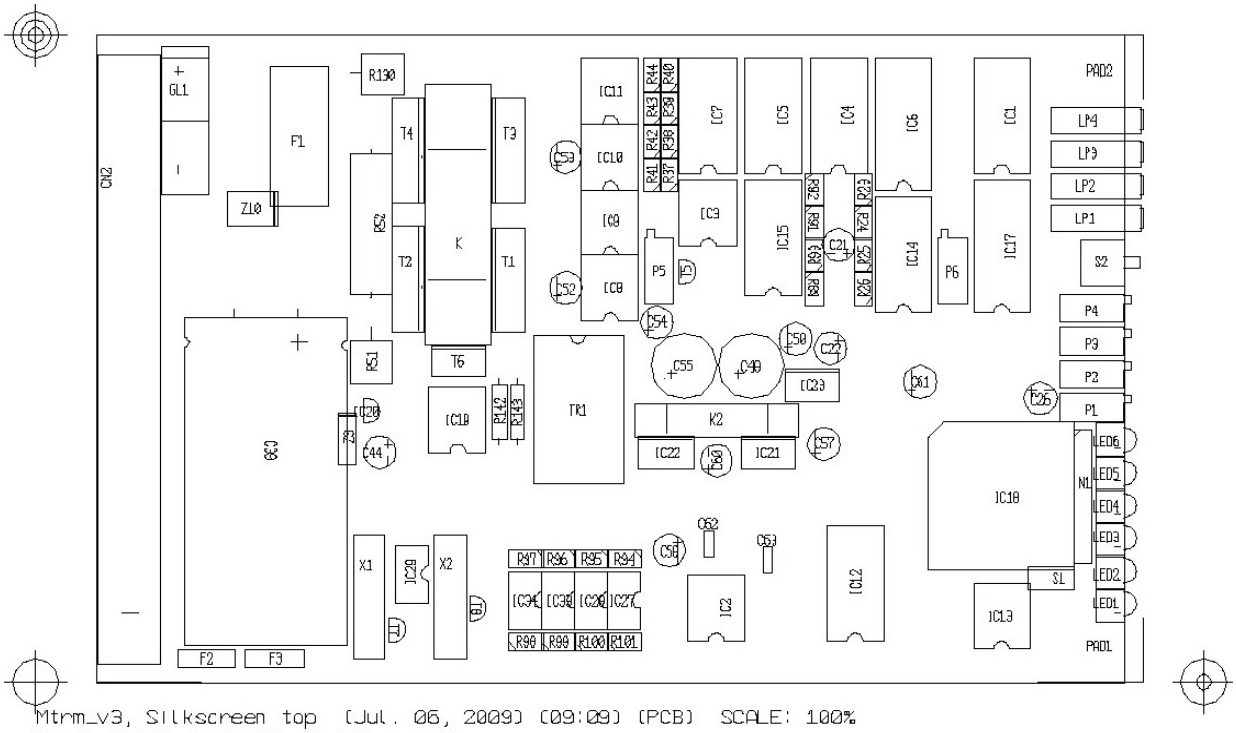

SMD parts at the soldering side of the pcb

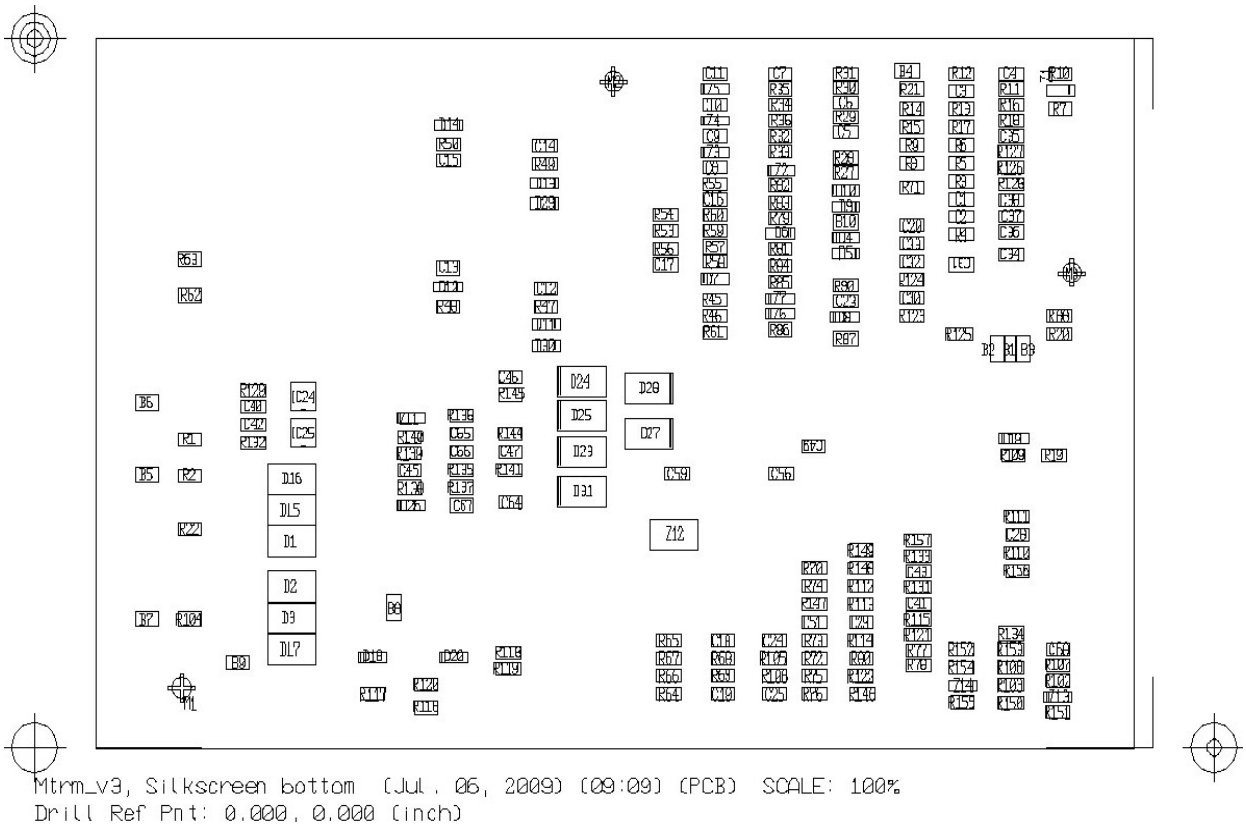

13. TROUBLE SHOOTING

No reaction, green LED1 is off.
Check the DC power voltage, if one of the voltages is missing please check the wiring.

Green LED1 is on, no other reaction.
LED3 (release) is off, input disable is open.

LED1 and LED3 are on, no other reaction.
Interruption in the motor circuit: Check integrity of the circuit with voltmeter.

Reaction but no speed and stop torque.
Set value = 0 V? P4 closed (completely on the left)?

Noise interference in the motor current.
Common-mode interference at the differential input is to high. Install a separate earth cable from GND (e.g. pin 28 ac) to the 0 V-point of the control unit.

Motor turns uncontrolled at high speed.
Soldering bridges for the actual speed control selected properly? No tacho voltage or tacho/ encoder connected incorrectly? Soldering bridge B4 on current regulation?

Rumbling, rhythmic running noise with premature activation of I^2t limit.
Tacho voltage ripple to large, use a better tacho or reduce the amplifiers gain.

Continuous available power to low, I^2t to early active.
Load to high, check current process and calculate effective value.
Unnecessary high pulsed currents. To optimize the pulse time in a permanent operation the phases of acceleration and deceleration have to be done with the lowest possible pulse current. Instead of of trapezoidal cycles triangular cycles without idle phases should be used.

Motor gets hot, even without load.
Temperature rise due to hysteresis losses. Reduce operation voltage or attach chokes in series with the motor.

Electrical interference too high.
Incorrect wiring. Mount reactors (chokes) directly adjacent to the amplifier and ground the cores with short connections to pin 28 ac. Ground screens of the control cables at the central zero point of the control unit and not at the amplifier.
Insert 330 Ohm resistors in the control lines from the external controller.

Maximum motor speed is to low.
Set value is too low, tacho voltage is to high, resolution of the encoder is to high, operation voltage is to low, load is to high. Please check the operation voltage and compare it with the e.m.f. at the required speed. Rise the effective current for a short time to confirm the overload: if yes the speed rises.

Too much drift.
Unfavourable input circuitry; inputs are reduced; interference voltage at the input cables. Input potentiometer on maximum. Check connections with regard to earth currents.

Over current alarm (with internal disable) at high speeds.
Commutation limit of the motor exceeded; choose smaller operation voltage and/or reduce peak current.

Red LED default is on.
Power supply to high, in start/stop operations the braking energy is to high = please use external circuit MABA.
Earth- or short-circuit in the motor output**.**
Admissible ambient temperature to high please improve heat convection.

Audible howl at constant frequency and motor shaft instability.
Torsional resonance due to weak attachment of the tachogenerator. Improve the tacho/motor coupling or use a tacho with a lower moment of inertia.

Imprecise regulation with a large overshot even with low gain.
Inductive phase angling rotation due to a large motor inductivity and small mechanical time constant. Please use a motor with a smaller inductivity; increase the working voltage.